Instruction Manual

Fairlight Console Assembly

June 2019

Welcome

Thank you for purchasing a Blackmagic Fairlight console for your audio post production!

Fairlight has been the premiere audio post production suite in the film and television industries for decades. It has a long history of innovative software and hardware engineering that's led the way for music and audio production. We are excited about the new Fairlight console and believe you will enjoy your experience with it.

Your Fairlight console is customizable, letting you install just the Fairlight modules you want depending on the number of bays in your console. Modules include the Fairlight Console Channel Control, Fairlight Console Channel Fader, Fairlight Console Audio Editor and Fairlight Console LCD Monitor. You can install the modules and build your system to suit your own needs.

All the fine controls in each module are designed for precision handling and finesse, featuring illuminated buttons with easy to read LCDs that let you monitor your settings and know exactly what is happening at all times. The faders are also servo assisted, so they are able to be saved and recalled while maintaining sync with DaVinci Resolve. There is nothing like watching the faders reacting to your adjustments in realtime while monitoring your audio mix!

With your Fairlight console and DaVinci Resolve's Fairlight page, you have the tools you need to shape your audio just the way you want it.

This instruction manual will guide you through assembling your Fairlight console, installing the Fairlight console modules and getting started with DaVinci Resolve so you can quickly start using your Fairlight console.

Also, please check the support page on our website at www.blackmagicdesign.com for the latest version of this manual and for updates to DaVinci Resolve. Keeping your software up to date will ensure you get all the latest features! We are continually working on new features and improvements, so we would love to hear from you!

Grant Petty

Grant Petty
CEO Blackmagic Design

Contents

Fairlight Console Assembly

Fairlight Console Components

The Fairlight console is available in 4 configurations that let you build your console to suit your production requirements. Fairlight modules, for example the Fairlight Console Channel Control, Fairlight Console Channel Fader, Fairlight Console Audio Editor, and the Fairlight Console LCD Monitor, are installed into the module slots within the Fairlight console chassis.

Fairlight 3 Bay Console

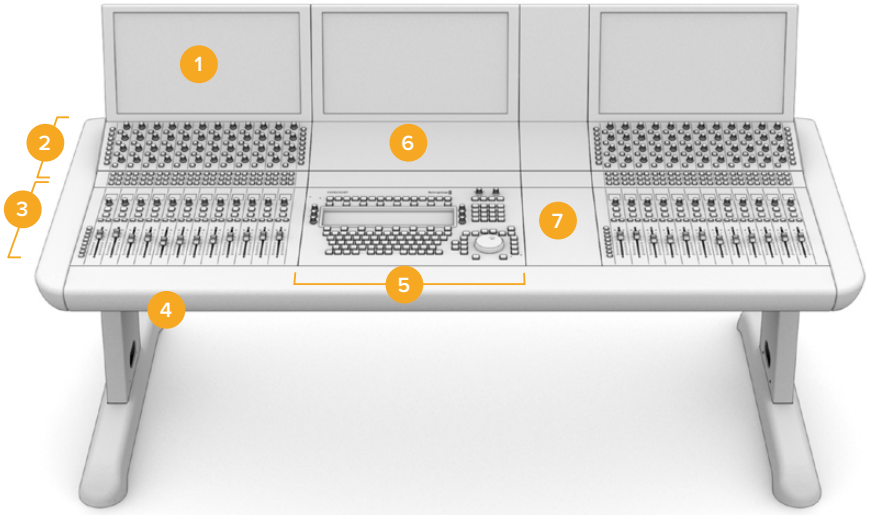

1. Fairlight Console LCD Monitor **2.** Fairlight Console Channel Control **3.** Fairlight Console Channel Fader
4. Fairlight Console chassis, includes legs **5.** Fairlight Console Audio Editor
6. Fairlight Console Channel Control Blank **7.** Space for your mouse or notes

The illustration above shows a fully assembled Fairlight 3 Bay console. In a typical 3 bay configuration, the Fairlight Console Channel Control and Fairlight Console Channel Fader modules are installed on each side of the Fairlight Console Audio Editor. However you can place modules in any position you prefer, as your Fairlight console is fully customizable.

On a 4 and 5 bay configuration, additional modules can be installed on each side.

Fairlight 5 Bay Console

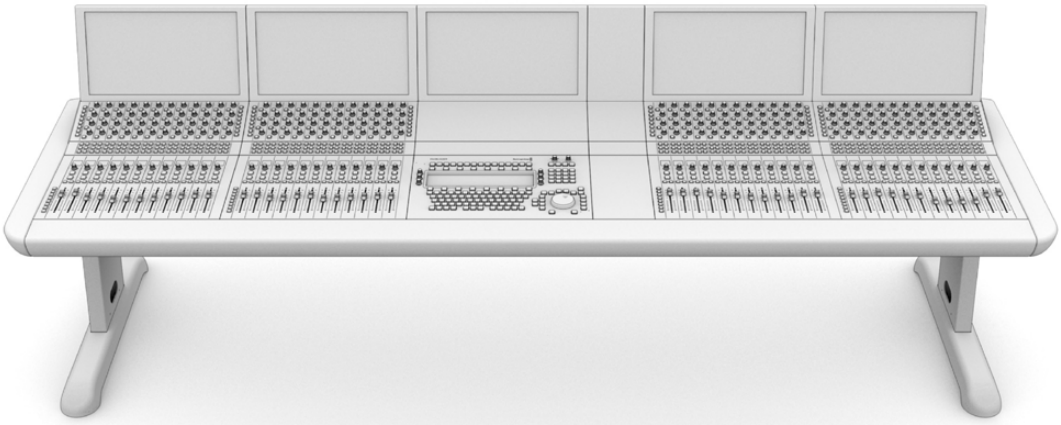

Fairlight 2 Bay Console

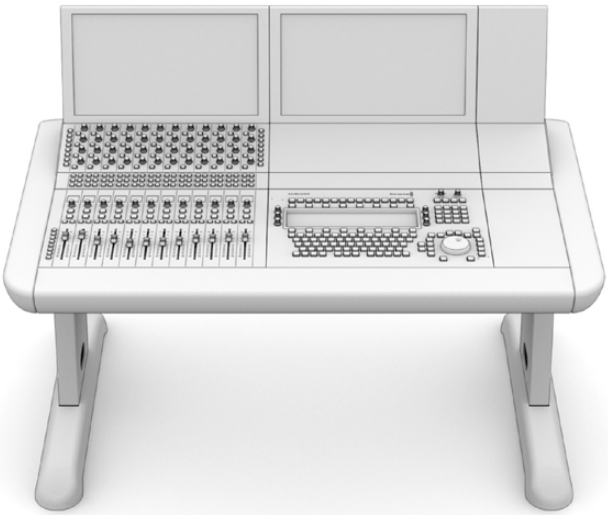

The 2 bay configuration sets the Fairlight Console Channel Control module and Fairlight Console Channel Fader module next to the Fairlight Console Audio Editor

NOTE You can arrange the Fairlight modules on either side of the audio editor and change the position of the mouse area. For example you may be left handed and want to have the mouse on the left side of the audio editor module. Fairlight modules are mounted in a module bracket that can be lifted out and repositioned. Keep reading this manual for more information on how to install the Fairlight modules into the module brackets.

A Fairlight Console Channel Rack Kit is also available from Blackmagic Design resellers if you need to install additional devices in your console. For example Blackmagic HyperDeck recorders or SmartScope Duo monitors.

Additionally, you can install Fairlight Console LCD Monitor Blank, Fairlight Console Channel Control Blank, or Fairlight Console Channel Fader Blank kits.

Unpacking and Assembling

Your Fairlight console is shipped in a large, strong and secure road case containing the Fairlight Console chassis and legs. Each Fairlight module is shipped separately. Refer to the 'technical specifications' section of this manual for a complete list of size and weight measurements for each Fairlight configuration.

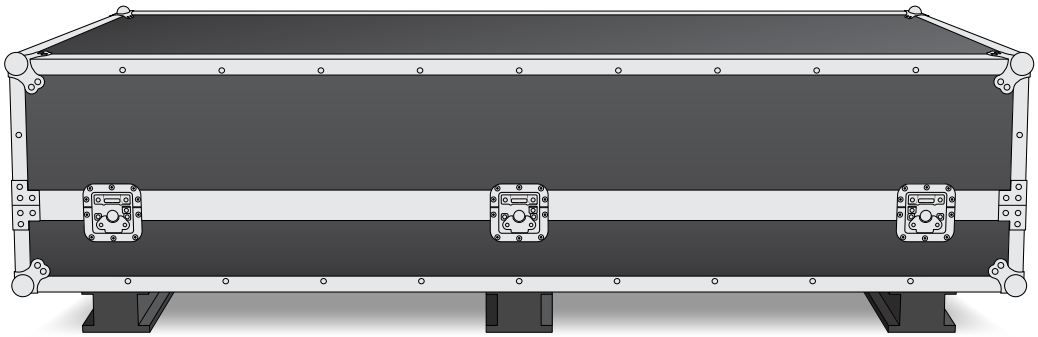

After opening your Fairlight console's road case, carefully remove the console chassis and place it gently onto a solid, stable surface strong enough to support the weight of the chassis and legs.

NOTE Please note that an empty Fairlight 3 Bay Console weighs 90kg and up to 150kg for a 5 bay console. The console is built strong and is clearly too heavy to be unpacked by one person. You will need to make sure that all lifting is performed by 4 people using the correct lifting techniques, such as bending your knees, keeping a straight back and lifting with careful, controlled movements.

The surface your Fairlight console will be placed onto for assembly needs to be high enough from the ground to ensure the legs are elevated when attaching to the chassis. Allow for at least 550mm. A scissor lift trolley or similar utility is the perfect solution for assembly.

Alternatively, if assembling the console with two or more people, you can stand the chassis on its rear panel while attaching the legs and feet. Refer to the next section named 'Alternative Assembly with Two or More People' for more details.

Tools Required

For assembly you will need the following tools:

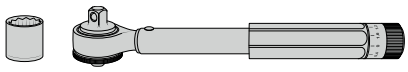	1 x Torque wrench with 19mm socket capable of 35 Nm.
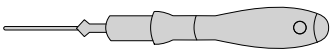	1 x Pozidriv 2 torque driver capable of 0.45 Nm for M3 and M4 screws.

We recommend using torque tools for tightening only, and using a regular wrench or driver for removing the screws.

Attaching the Legs to the Console Chassis

The road case contains two legs that attach to each side of the console chassis. However, before attaching to the chassis, you should first secure the feet to each leg. Each assembled leg weighs 10 kilograms, so please take care when lifting.

The feet are attached to the console chassis with their length longer at one end. Ensure the longer end is facing the front of the console.

To attach the foot to each leg:

1. Lay the leg on its side with the cover panel facing upwards. Remove the two M12 screws from the end including the small brace plate.

2. Align the foot to the end of the leg and hold it in place. Make sure the rectangular cut outs on the bottom of the leg and brace plate are completely aligned.

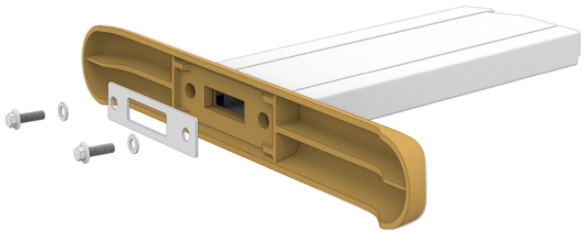

3. Now place the support plate on the bottom of the foot and secure the foot to the leg using the two M12 screws. Tighten to a torque of 35 Nm.

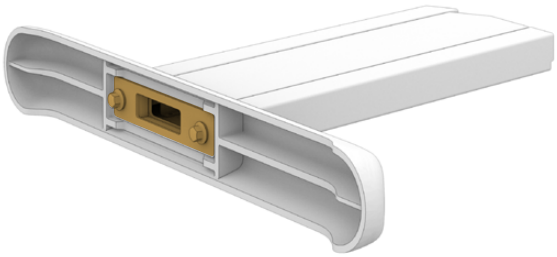

4. Repeat steps 1 to 3 for the second leg.

To attach the legs to the console chassis:

1. Remove the side cover from each leg by unscrewing the four M3 screws from the opposite side of the leg using a Pozidriv 2 screwdriver.

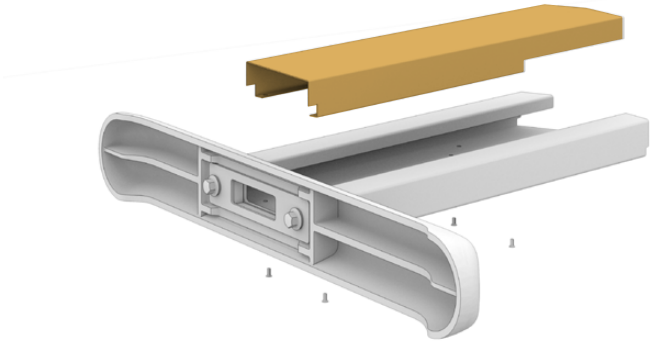

2. Remove the four M12 leg fastening screws from each side of the console chassis.
3. Align each leg to the side of the console by mounting it against the guide pins on the chassis.

4. Secure the legs to the chassis with the leg fastening screws and tighten the screws to a torque of 35 Nm.

   The side cover for each leg can be reattached later. Leaving the cover off at this point of assembly provides access to the inside of the leg for when you are wiring up the panels inside the console.

5. Carefully lower the console from the support surface and place it on the floor.

   We recommend placing the assembled chassis as close to its intended position as possible, as once Fairlight modules are installed, the overall weight of the unit will increase substantially. Ensure there is enough space at the rear of the chassis to replace the back panel before securing your console into position.

Alternative Assembly with Two or More People

If you don't have access to a scissor lift trolley or similar utility and have someone to help you, you can stand the chassis on its rear panel and attach the legs and feet from this position.

To assemble the legs and feet:

1. After removing the console chassis from its road case, gently lean the chassis onto its rear panel. Ensure a second person holds the chassis in place so it does not slip.

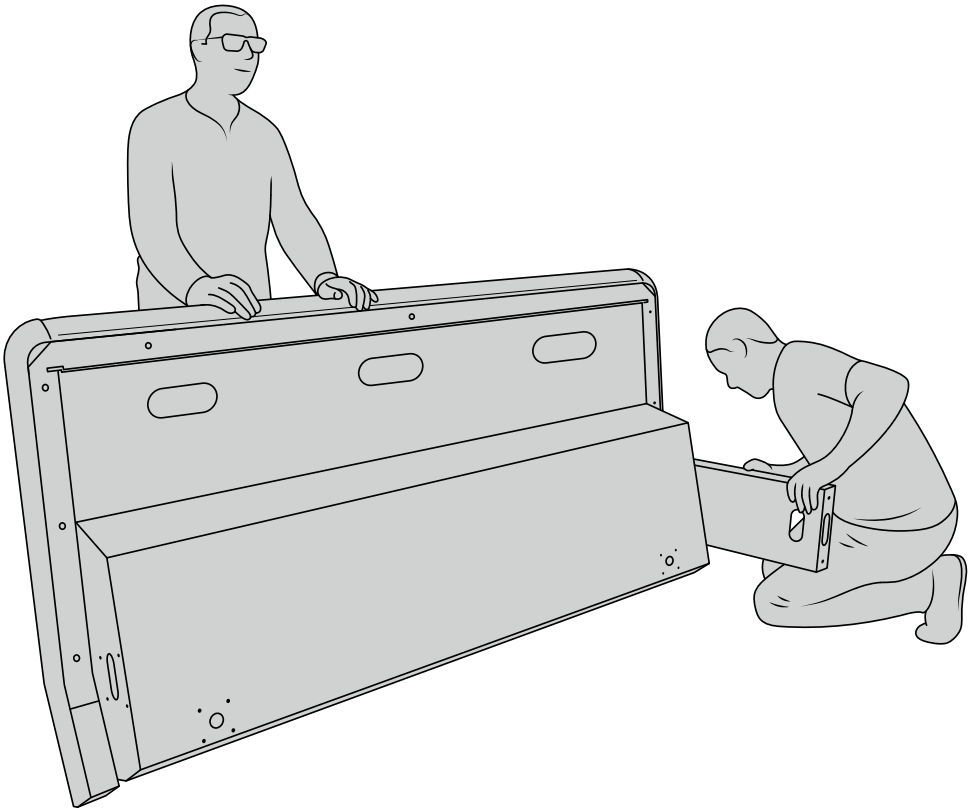

Lean the console chassis onto its rear panel so the front is facing upwards

2. With the console chassis securely held in place, attach the legs as shown in the previous section.

3 Attach the feet to each leg.

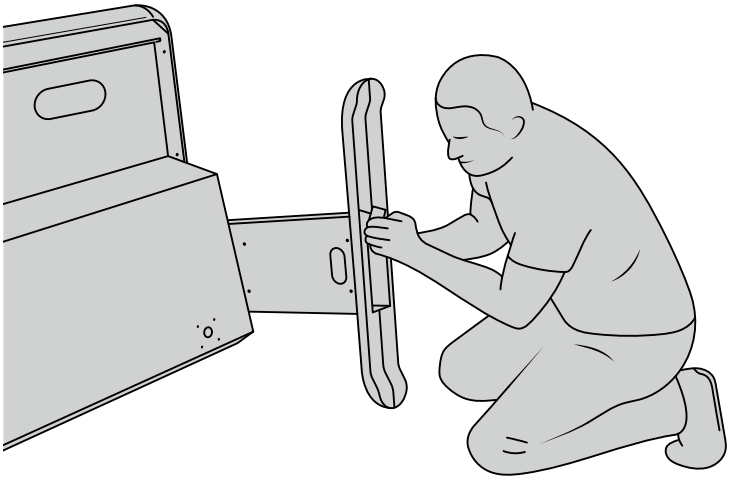

4 Once the legs and feet are attached, lean the chassis onto its feet into its standing position.

Lean the Fairlight console onto its feet, ready to install the Fairlight panels

With the legs and feet attached to the console chassis, you can now install the Fairlight panels.

Installing the Fairlight Panels

The most common layout Fairlight audio engineers use for mounting the modules is to place the Fairlight Console Audio Editor directly in front of the operator, the Fairlight Console Channel Control and Channel Fader modules on each side, and the channel control modules above each channel fader module. Their respective LCD monitors are installed along the top with the monitor infill module. The small surface in between the Fairlight modules is for a mouse or trackball.

If you don't have all the modules for a full console, you can fill in the spaces with blank panels until you are ready to add more modules later. You can add modules any time you like and as you need them based on your production requirements.

To install the Fairlight modules into the console chassis:

1. Remove the back panel from the chassis by unscrewing the M3 screws using a Pozidriv 2 screwdriver, and keep the panel and screws nearby in a safe place. Removing the back panel provides better access to the inside of the chassis when installing the Fairlight modules.

2. Each Fairlight module has its own module bracket you can easily lift and remove from the chassis. This lets you install modules into their brackets on a bench where there is more space, then easily mount the assembled brackets into the chassis.

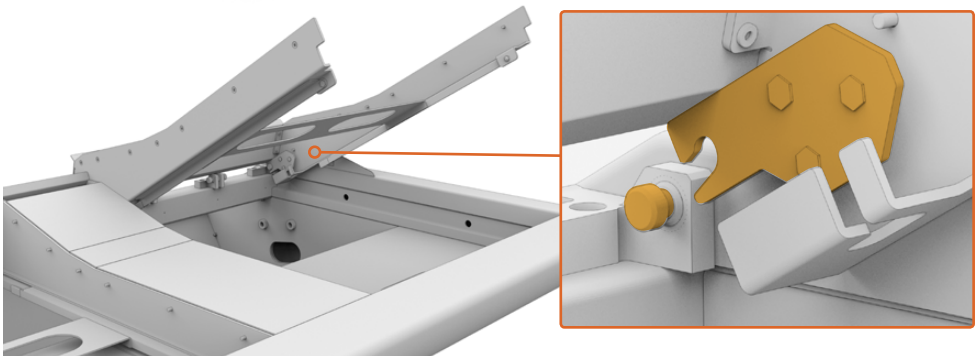

Hold each bracket arm and gently rotate the bracket up from the chassis. The bracket hinges from the rear, allowing you to free the bracket from the chassis by pulling it away from the hinge pin.

3. With the module bracket removed from the chassis, place it on a stable surface, ready for attaching the Fairlight modules. We recommend installing modules starting with the LCD monitor at the top, the Fairlight Console Channel Control module in the middle, then the Fairlight Console Channel Fader module closest to the audio operator.

4. Secure each module to the bracket using the M4 Pozidriv screws supplied with your Fairlight module. Tighten to a torque of 1.5 Nm.

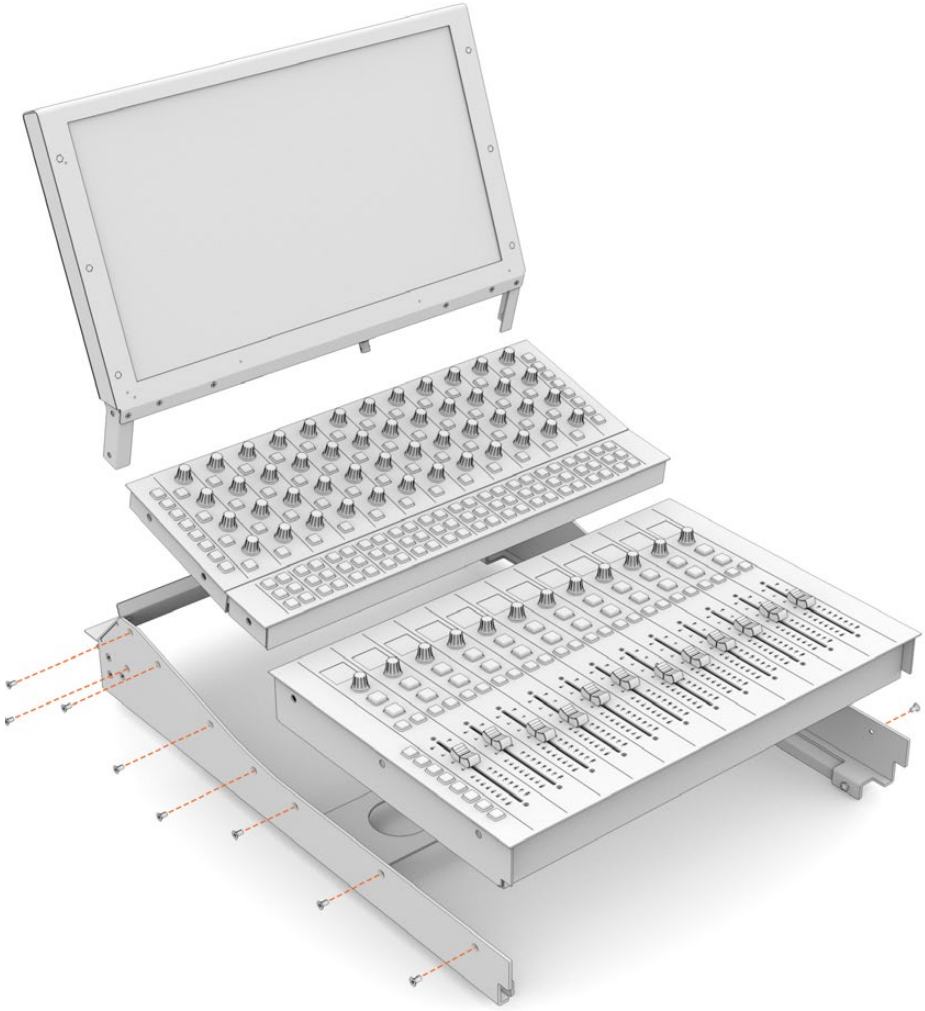

5. You can now place the assembled module bracket back into the chassis by repositioning its rear latches over the chassis hinge pins and gently lowering the bracket into place.

NOTE When installing a bracket with Fairlight panel modules attached, we recommend one person holding the front edge of the bracket, with a second supporting the bracket from underneath the chassis as it is lowered into place. This lets you lower the bracket gently without dropping the edge at the final moment.

After installation, the brackets can be lifted again by pushing from underneath with one hand, and lifting the front of the bracket with the other. Each bracket has a bay lift support brace you can swing out from underneath. This lets you safely prop the bracket away from the chassis when you need to access the interior for cabling.

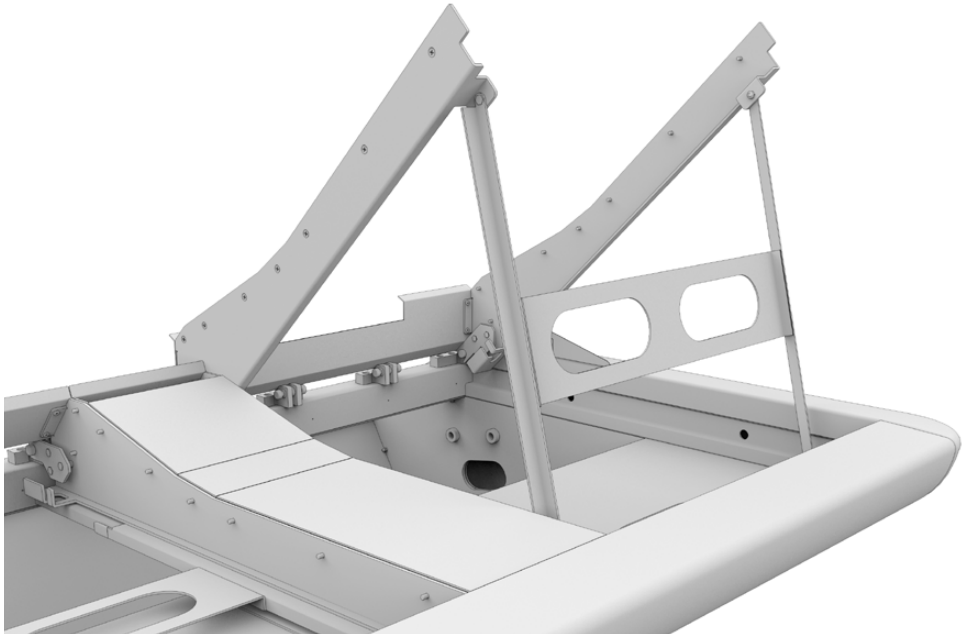

Lower the support brace by holding the brace handles and rotating the brace down from the bracket. Allow the feet of the brace to rest inside and against the front of the chassis so it cannot move.

Attaching the Monitor Infill Module

Inside the road case, you'll find a small cardboard box. This box contains the LCD monitor infill module that is installed next to the LCD monitors.

Remove the infill bracket from the chassis following the same procedure used for the other module brackets.

To attach the infill module:

1. Place the monitor infill module into the neck of the bracket.
2. Secure the infill module to the bracket using the supplied M4 Pozidriv screws. Tighten to a torque of 0.45Nm.
3. Place the bracket back into the chassis.

Powering the Modules

Each Fairlight module is powered independently via its own power input. Simply plug each module into your mains power supply using a standard IEC power cable.

We recommend using five way power boards to distribute power to the Fairlight modules, with each power board to supply up to five modules only. Ensure the power boards are not daisy chained and are each independently connected to mains power.

Two chassis earth points are built into the inner sides of the chassis for securing to a building earth point. After installation, ensure at least one of the chassis earth points is connected to the building earth point via an appropriately sized and bonded earth wire. With the Fairlight console's rear cover detached, you can easily access the earth points on each side of the chassis.

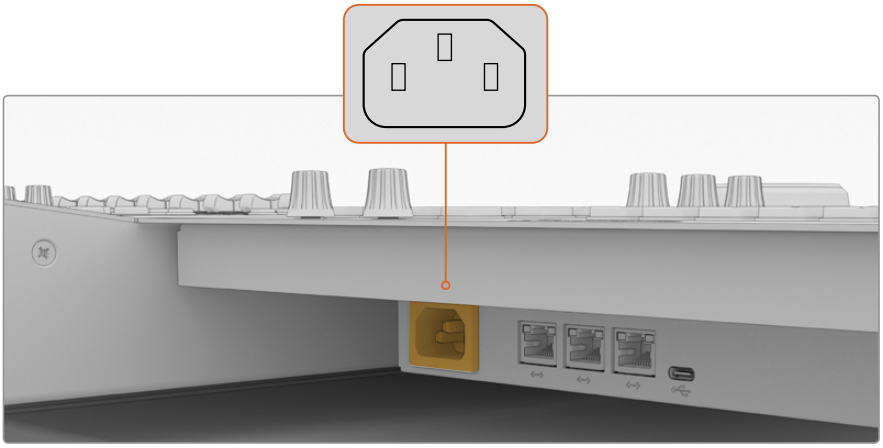

Connect power to each Fairlight module via its standard IEC power input

Arranging Cables and Replacing the Leg Side Covers

Your Fairlight console is designed to keep cables tidy. After connecting power cables, you can bundle them together and guide them through the cable slots on each leg.

Once cables are in place, you can then re-install the leg side covers and tighten their 4 x M3 Pozidriv screws to a torque of 0.35Nm.

Connecting the Fairlight Modules

After installing the Fairlight modules and plugging in power, connect each module to the other using an Ethernet daisy chain. It doesn't matter which particular unit is connected to the other, as long as they are all connected via their Ethernet ports.

If you would like to use an Ethernet switch to connect the modules, this is ok and just place the Ethernet switch inside the console where there is lots of space. Then you can connect each panel module to the switch directly.

Below is an example of how you could connect the Fairlight modules in a daisy chain.

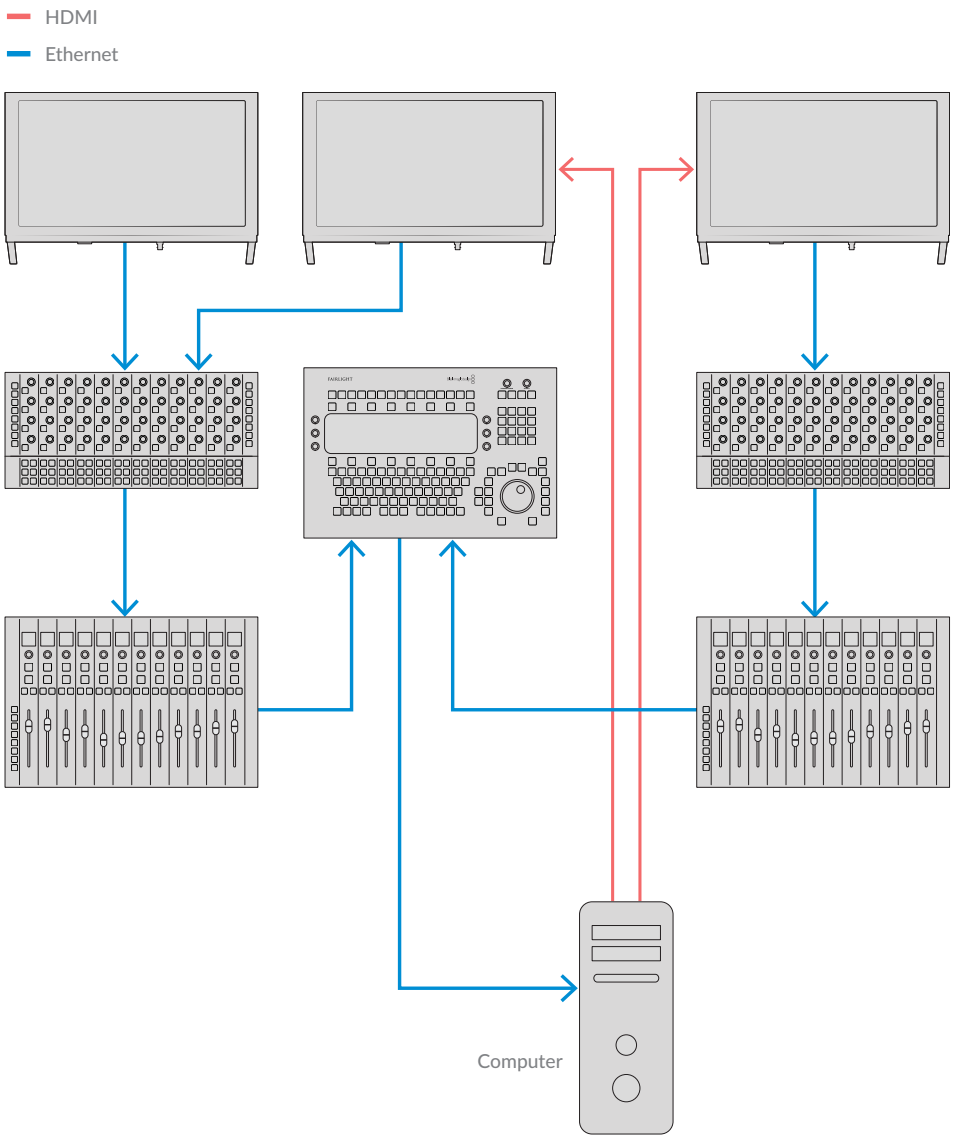

TIP We recommend using 1.2 meter Cat6 Ethernet cables. These will allow you to lift the panel brackets after installation without stretching the cables.

Connecting the Fairlight Console to your Computer

Once all the modules in the console are connected together via ethernet, connect one of them to the computer that will run DaVinci Resolve.

Connecting the Computer's HDMI or SDI Output

The LCD monitor above the Fairlight Audio Editor connects to your computer's HDMI monitor output. This lets you monitor DaVinci Resolve's Fairlight page.

This LCD monitor can also be connected to the SDI output from video playback equipment, for example a Videohub router or Decklink video output.

You can also bundle the Ethernet and video cables together with the power cables that are threaded through your console's legs and feet. This keeps all cables neatly together to and from your Fairlight console.

Reattaching the Chassis Back Panel

Now that all your Fairlight modules are installed, powered and connected, the final step to complete the assembly of your console is to reattach the chassis' back panel.

Secure in place using the M3 Pozidriv screws and tighten to a torque of 0.45 Nm.

This completes the assembly and connection setup for your Fairlight console. You are now ready to confirm your console is working with DaVinci Resolve.

Configuring the Fairlight Modules

The next step is to configure your Fairlight console for your studio.

There are two Fairlight utilities that are included in the DaVinci Resolve installer. The utilities are called Fairlight Panel Setup and Fairlight Studio Utility.

The full studio version of DaVinci Resolve can be installed from the SD card included with your Fairlight Console, but we recommend downloading the latest version from the Blackmagic Design Support Center at www.blackmagicdesign.com/support.

To install DaVinci Resolve, launch the DaVinci Resolve installer and follow the onscreen prompts. Be sure to select the 'Fairlight Studio Utility' when installing DaVinci Resolve.

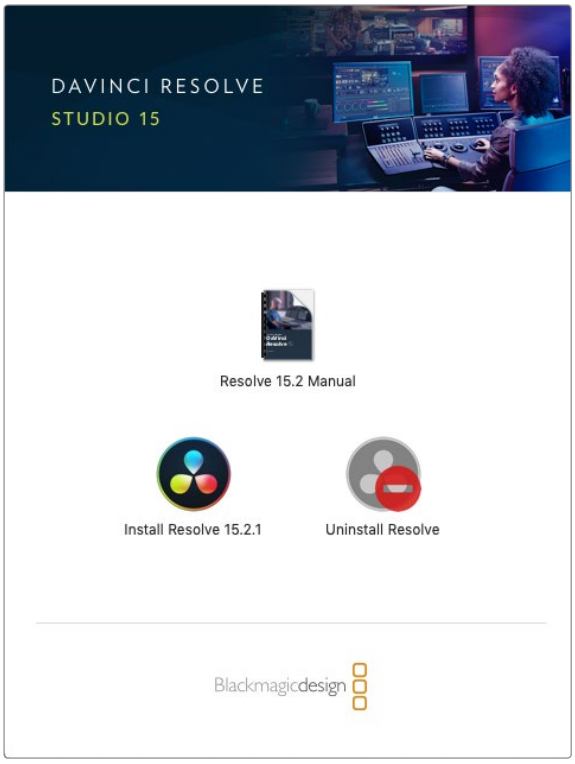

Fairlight Panel Setup

Fairlight Panel Setup can be connected to the Fairlight module via USB or Ethernet using DHCP. If you are not using a DHCP server, you can set the network settings to a fixed IP address via USB. More information for changing network settings is provided later in this manual.

When configuring the Fairlight console for your studio, the first step is to name each module using the Fairlight Panel Setup utility. This lets you easily identifiy each panel module by clicking on the 'identify me' checkbox.

To name each module:

1. Launch the Fairlight Panel Setup utility.

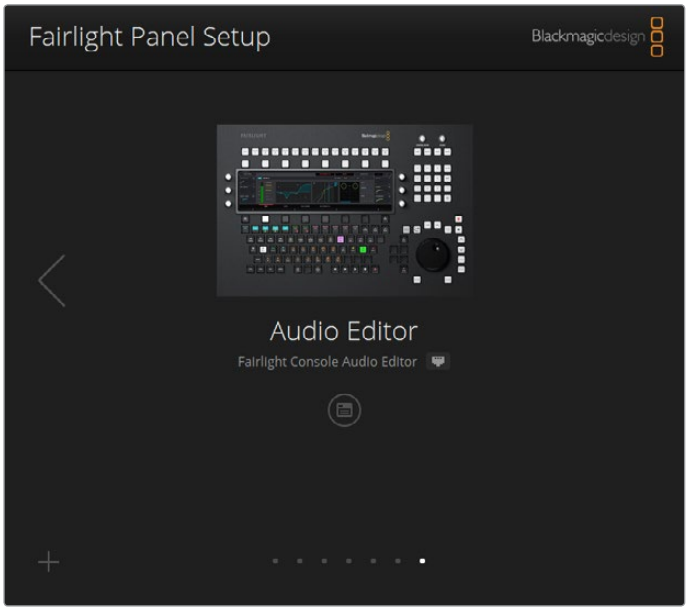

The currently selected module will be visible on the setup utility home screen. Navigate to each installed unit by clicking on the arrows on each side of the home screen

2. Select a module on the home screen and click on the settings icon. You can also click on the module's image to open the settings window.

3. Click on the 'configure' tab. Under 'device name' you will see a 'label' text box. Change the name in the text box and click 'save'. You can visually identify each module installed in your console by clicking on the 'identify' checkbox. This will illuminate features on the module.

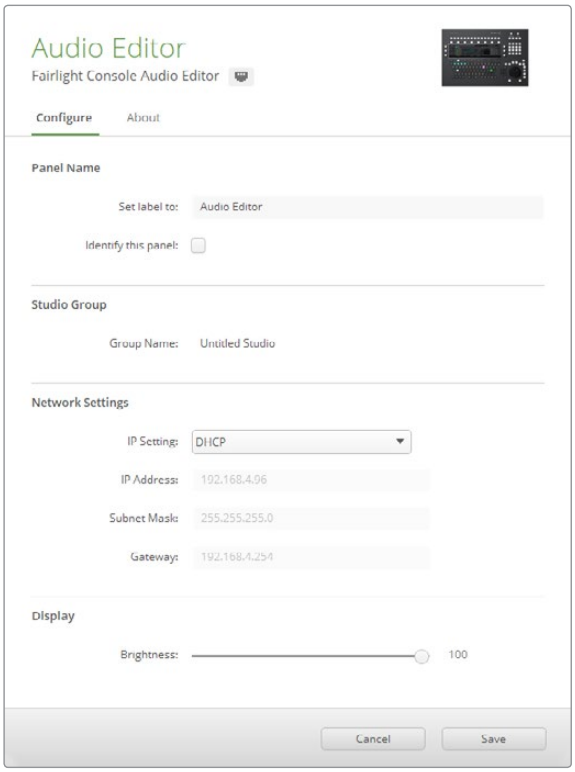

Assign a custom name for each Fairlight module using the 'configure' settings in the Fairlight Panel Setup utility

Studio Name

Name the studio this Fairlight module will be assigned to.

Network Settings

Refer to the 'Changing Network Settings' section for information on manually changing these settings.

Brightness

Changes the brightness of the Fairlight module's LCDs, or the brightness of the Fairlight Console LCD Monitor. Drag the slider left or right to decrease or increase the brightness.

Display Source

Each Fairlight Console LCD Monitor can be set as a data display or video monitor. This means the monitor can be set to display the Fairlight page connected via Ethernet, or a video image if there is a signal connected to the monitor's HDMI or SDI video input.

Data display – Displays the Fairlight page.

Video monitor – Displays the SDI or HDMI video input.

If a video signal is connected to either the HDMI or SDI input, the monitor will automatically detect which input is being used. However, if both inputs have a video signal connected, you can manually set the desired input.

3D LUT

When monitoring a video input, you can load a 3D LUT. For example, a 3D LUT can be used to change the color space of the input video from a flat look to Rec 709, or you may want to load a preset 'look' designed during post production. You can also use this 3D LUT to fine tune the display on each of your Fairlight console's LCD monitors if the color reproduction between them is a little different.

To load a 3D LUT:

1. In the 'load LUT' setting, click on the 'load' button.
2. Navigate to the folder where your LUTs are stored and click on the desired .cube LUT file.
3. Click 'open'.

The 3D LUT will now be applied to your video source. If you want to disable the LUT, click on the 'clear' button.

Changing Network Settings

If you need to change the network settings for each module manually, you can change the settings in the 'configure' tab of the Fairlight Panel Setup utility. When changing network settings, you will need to connect the panel to your computer via USB.

To change network settings:

1. Open the Fairlight Panel Setup utility. Click on the settings icon, or the Fairlight module displayed on the home page to open the settings for that module.
2. Click on the 'configure' tab.
3. Change the 'IP Setting' from DHCP to 'Static IP'.
4. In the 'network settings', type a new address into the IP address, subnet mask, and gateway text boxes.

   When the IP address is set correctly, the module will be accessible on your network.

Repeat the same process for each Fairlight panel via USB.

Updating your Fairlight Modules' Internal Software

It's a good idea to regularly check our website for new software updates.

When a new version of DaVInci Resolve is installed, it may also install updates for your Fairlight console. To check, open the Fairlight Panel Setup utility and if there are new updates you will see an 'update' button on the home screen for each module. Simply click on the 'update' button and follow the prompts to update each module.

With all the setup settings complete, you can now close the Fairlight Panel Setup utility.

Fairlight Studio Utility

After setting up your Fairlight modules in the setup utility, assign each module to your Fairlight Console using the Fairlight Studio Utility. This configures your console as a studio, telling DaVinci Resolve exactly where each panel is in your Fairlight console so the Fairlight page can control them all properly and display their controls on the appropriate LCD monitors.

The Fairlight Desktop Audio Editor does not need to be added to a studio configuration to be selected by DaVinci Resolve. If you have only a Desktop Audio Editor in your studio, go to the next section, 'Selecting your Fairlight Console in DaVinci Resolve', and follow the instructions there to select the editor in DaVinci Resolve.

To set up a Fairlight Console for each studio:

1. Launch the Fairlight Studio Utility.
2. Select the number of bays in your Fairlight console and click 'next'. This will open a configuration screen where modules are assigned to the corresponding chassis slots in each bay.

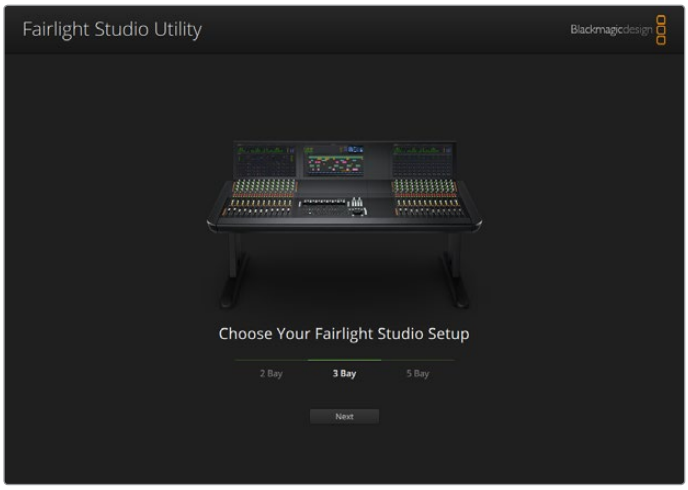

Select the number of bays in your Fairlight console

3. In the configuration screen, click on the top left slot to assign a Fairlight Console LCD Monitor. From the list of modules, select the desired monitor for the corresponding slot by clicking on its icon.

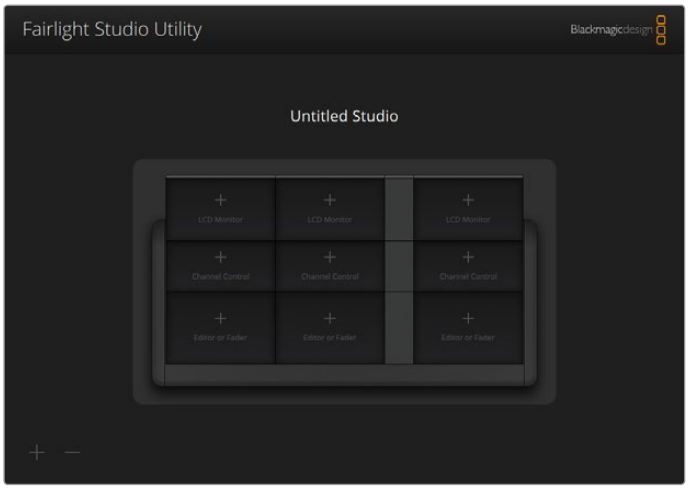

Click on the top left slot to assign the corresponding LCD monitor

Each module can be identified by the custom name you entered when labeling the modules. You can also click on the light bulb icon for each module to visually identify it. When clicking on the light bulb, features will illuminate on the relevant module.

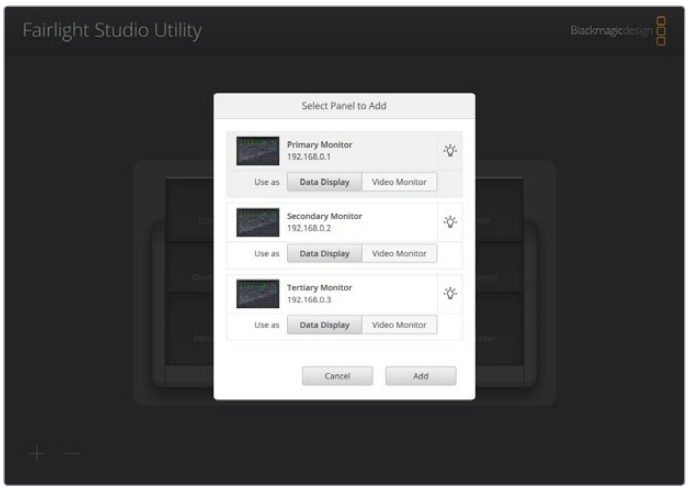

Click on the light bulb icon to identify each module in your Fairlight console

4 Click 'add'.

The monitor will be assigned to the top left slot on your Fairlight console. You can now follow the same procedure to assign all the other panels to the corresponding positions in the configuration utility. If you select the wrong module by mistake, all you need to do is click on the module in the group to reveal its options and then click on the 'X' icon to remove it.

As you configure each module, you can confirm it corresponds to the correct position in the console by clicking on the module in the group to reveal its options and then clicking on the light bulb icon.

Your Fairlight console is now configured as a studio and you can change the name of the studio by clicking in the 'untitled studio' text box, typing a new name, and pressing the 'return' key to confirm. This makes it easier to identify each studio if you have multiple studios installed in your facility.

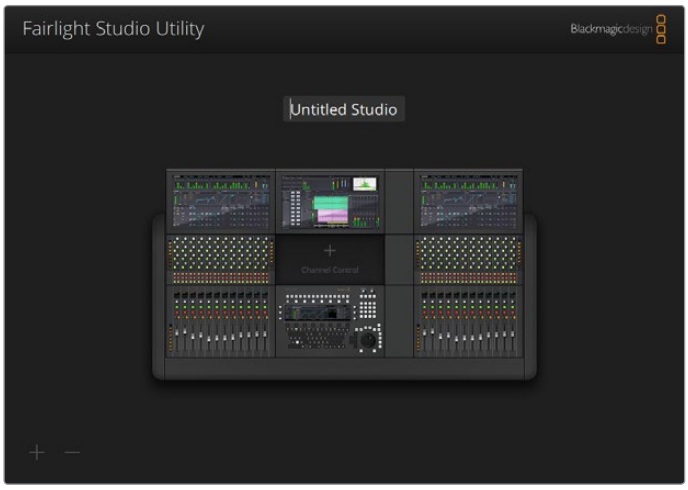

Rename the newly configured studio by clicking in the studio name, typing a new one, then pressing the 'return' key to confirm the change

Selecting your Fairlight Console in DaVinci Resolve

The next step is to select your Fairlight console in DaVinci Resolve's preferences.

1. Launch DaVinci Resolve.
2. In the menu bar at the top of the screen, select DaVinci Resolve/Preferences.

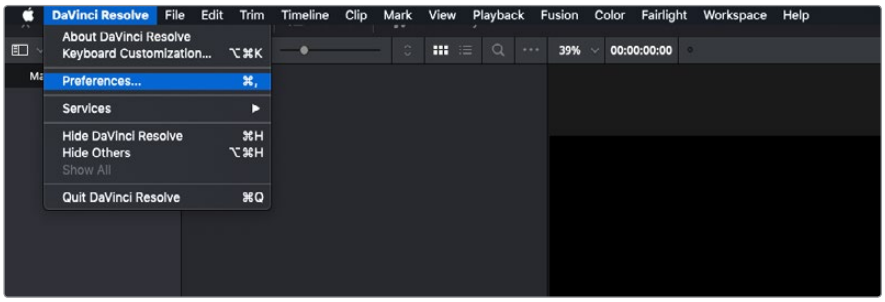

3. In the 'Control Panels' menu, you'll notice an option for 'Audio Console' and a drop down menu where you can select your console for Fairlight. Click on the drop down menu and select the studio name for your console. If you have a standalone Fairlight Desktop Audio Editor, you can also select it here.

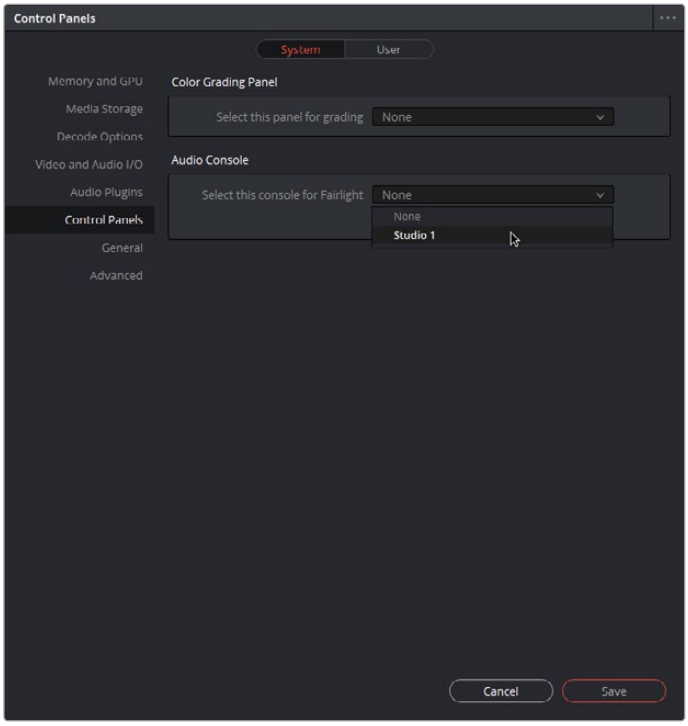

4. Click 'Save'.

The preferences window will close and a new message will appear asking you to restart DaVinci Resolve. Simply restart DaVinci Resolve and your console will now be selected for control using the Fairlight page.

Technical Specifications

Fairlight Road Case Dimensions

All contents included

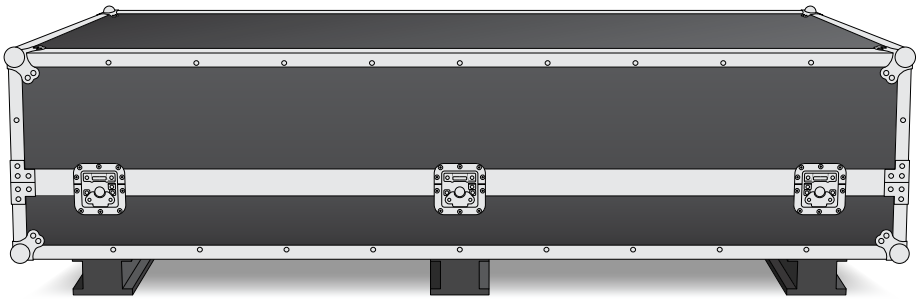

2 bay Console Road Case

Width = 1353 mm

Height = 552 mm

Depth = 1101 mm

Weight = 180 kg

3 bay Console Road Case

Width = 1844 mm

Height = 552 mm

Depth = 1101 mm

Weight = 205 kg

4 bay Console Road Case

Width = 2825 mm

Height = 552 mm

Depth = 1101 mm

Weight = 280 kg

5 bay Console Road Case

Width = 2825 mm

Height = 552 mm

Depth = 1101 mm

Weight = 300 kg

Fairlight Console Dimensions and Weight

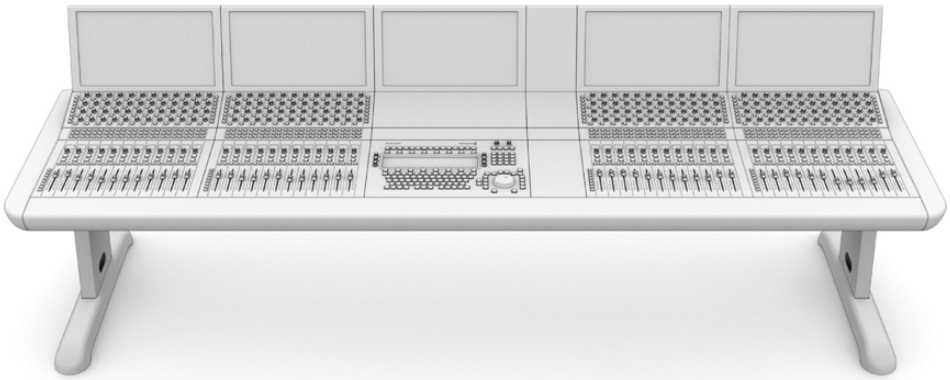

2 bay Console

Width = 1295 mm

Height = 1047 mm

Depth = 982 mm

Weight

Empty chassis including legs and monitor infill panel = 90 kg

Fully assembled = 120 kg

3 bay Console

Width = 1788 mm

Height = 1047 mm

Depth = 982 mm

Weight

Empty chassis including legs and monitor infill panel = 110 kg

Fully assembled = 157 kg

4 bay Console

Width = 2277 mm

Height = 1047 mm

Depth = 982 mm

Weight

Empty chassis including legs and monitor infill panel = 130 kg

Fully assembled = 195 kg

5 bay Console

Width = 2769 mm

Height = 1047 mm

Depth = 982 mm

Weight

Empty chassis including legs and monitor infill panel = 150 kg

Fully assembled = 232 kg

Fairlight Panels Dimensions and Weight

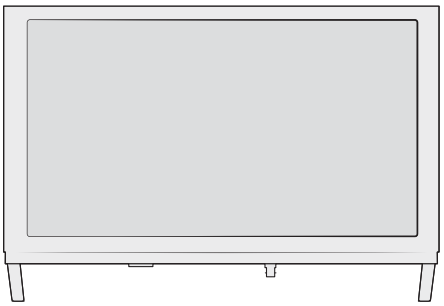

Fairlight Console LCD Monitor

Width = 489.6 mm

Height = 335.4 mm

Depth = 58.7 mm

Weight = 4.4 kg

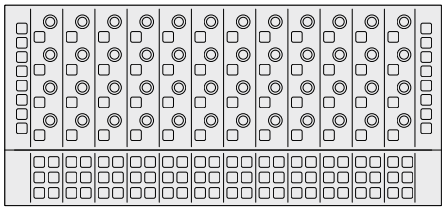

Fairlight Console Channel Control

Width = 489.6 mm

Height = 229.3 mm

Depth = 66.5 mm

Weight = 4.4 kg

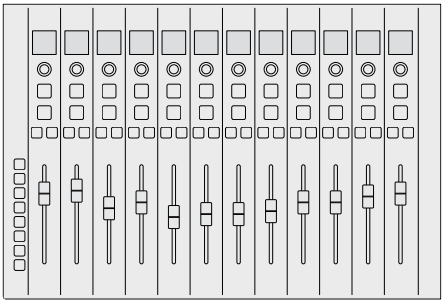

Fairlight Console Channel Fader

Width = 489.6 mm

Height = 329.9 mm

Depth = 66.6 mm

Weight = 8.45 kg

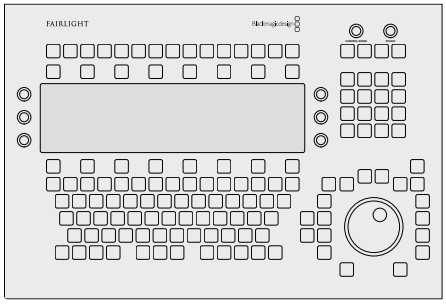

Fairlight Console Audio Editor

Width = 489.6 mm

Height = 329.9 mm

Depth = 69 mm

Weight = 8.5 kg

Power Consumption

Input Power

100-240VAC, 1.7A, 50-60Hz

Operating Temperature

Fairlight Console Audio Editor, Fader and Channel Control panels

0 to 40°C or 40 to 104°F

Fairlight Console LCD Monitor

0 to 35°C or 40 to 95°F

Help

The fastest way to obtain help is to go to the Blackmagic Design online support pages and check the latest support material available for your Fairlight Console.

Blackmagic Design Online Support Pages

The latest manual, software and support notes can be found at the Blackmagic Design support center at www.blackmagicdesign.com/support.

Contacting Blackmagic Design Support

If you can't find the help you need in our support material, please use the 'Send us an email' button on the support page to email a support request. Alternatively, click on the 'Find your local support team' button on the support page and call your nearest Blackmagic Design support office.

Checking the Software Version Currently Installed

To check which version of Fairlight Console software is installed on your computer, open the Fairlight Console Components Setup utility and click on the 'about' tab. The current version number will be displayed.

How to Get the Latest Software Updates

After checking the version of Blackmagic Fairlight software installed on your computer, please visit the Blackmagic Design support center at www.blackmagicdesign.com/support to check for the latest updates. While it is usually a good idea to run the latest updates, it is wise to avoid updating any software if you are in the middle of an important project.

Regulatory Notices

Disposal of waste of electrical and electronic equipment within the European union.

The symbol on the product indicates that this equipment must not be disposed of with other waste materials. In order to dispose of your waste equipment, it must be handed over to a designated collection point for recycling. The separate collection and recycling of your waste equipment at the time of disposal will help conserve natural resources and ensure that it is recycled in a manner that protects human health and the environment. For more information about where you can drop off your waste equipment for recycling, please contact your local city recycling office or the dealer from whom you purchased the product.

This equipment has been tested and found to comply with the limits for a Class A digital device, pursuant to Part 15 of the FCC rules. These limits are designed to provide reasonable protection against harmful interference when the equipment is operated in a commercial environment. This equipment generates, uses, and can radiate radio frequency energy and, if not installed and used in accordance with the instructions, may cause harmful interference to radio communications. Operation of this product in a residential area is likely to cause harmful interference, in which case the user will be required to correct the interference at personal expense.

Operation is subject to the following two conditions:

1. This device may not cause harmful interference.
2. This device must accept any interference received, including interference that may cause undesired operation.

Connection to HDMI interfaces must be made with high quality shielded HDMI cables.

Safety Information

Weight Warning

The Fairlight Console has considerable weight even when empty. For example, a three bay console weighs up to 110 kg empty, and 157 kg fully assembled. You should always move a Fairlight console with at least 4 people using safe lifting procedures, such as keeping the back straight, bending the knees and lifting with careful, controlled movements.

Electrical Warning Notice and Disclaimer

For installations involving the fitting of more than three Fairlight modules, additional earthing requirements must be fitted before connecting the supply.

It is recommended that any metallic equipment enclosures are securely connected to the metallic console frame. The metallic console frame must be earthed according to the appropriate electrical standards that apply at the installation location. Earth posts are welded internally at both ends of the console frame for connecting earth wires from the console frame to the building earth point. Either of these posts can be used and they are marked with the following label.

Fastening screws and associated washer parts used to connect enclosures to the console frame must ensure a reliable and low resistance electrical contact between the enclosures and console frame.

The electrical mains wiring from the building supply point to the console and to all equipment located inside the console is the customer's responsibility.

Blackmagic Design recommends appointing a qualified and licenced electrician to install, test and commission this wiring system. Safety requirements should be independently assessed, certified and verified. For example, due consideration of the distribution cable and wire types, sizes, ratings, insulation, armouring, screening, strain relief, protective conduits and fixture methods would need to be addressed and calculations made to take into account the maximum electrical load.

Blackmagic Design does not accept responsibility for the safety, reliability, damage or personal injury caused to, or by, any third-party equipment fitted into the console.

From the building supply and earthing point, the correct wiring, electrical isolation, switching, fusing and protective devices, such as earth leakage breakers, would need to be located properly, labelled and regularly tested.

Earth continuity tests, that is earth resistance tests at high currents, would be necessary during and regularly after installation to comply with the relevant electrical regulations. In some cases, lightning protection and/or surge suppression may need to be installed.

To reduce the risk of electric shock, do not expose this equipment to dripping or splashing.

Ensure that adequate ventilation is provided around the product and is not restricted.

Use only at altitudes not more than 2000m above sea level.

No operator serviceable parts inside. Refer servicing to your local Blackmagic Design service centre.

Warranty

12 Month Limited Warranty

Blackmagic Design warrants that this product will be free from defects in materials and workmanship for a period of 12 months from the date of purchase. If a product proves to be defective during this warranty period, Blackmagic Design, at its option, either will repair the defective product without charge for parts and labor, or will provide a replacement in exchange for the defective product. In order to obtain service under this warranty, you the Customer, must notify Blackmagic Design of the defect before the expiration of the warranty period and make suitable arrangements for the performance of service. The Customer shall be responsible for packaging and shipping the defective product to a designated service center nominated by Blackmagic Design, with shipping charges pre paid. Customer shall be responsible for paying all shipping charges, insurance, duties, taxes, and any other charges for products returned to us for any reason.

This warranty shall not apply to any defect, failure or damage caused by improper use or improper or inadequate maintenance and care. Blackmagic Design shall not be obliged under this warranty: a) to repair damage resulting from attempts by personnel other than Blackmagic Design representatives to install, repair or service the product, b) to repair damage resulting from improper installation, use or connection to incompatible equipment, c) to repair any damage or malfunction caused by the use of non Blackmagic Design parts or supplies, or d) to service a product that has been modified or integrated with other products when the effect of such a modification or integration increases the time or difficulty of servicing the product.

THIS WARRANTY IS GIVEN BY BLACKMAGIC DESIGN IN LIEU OF ANY OTHER WARRANTIES, EXPRESS OR IMPLIED. BLACKMAGIC DESIGN AND ITS VENDORS DISCLAIM ANY IMPLIED WARRANTIES OF MERCHANTABILITY OR FITNESS FOR A PARTICULAR PURPOSE. BLACKMAGIC DESIGN'S RESPONSIBILITY TO REPAIR OR REPLACE DEFECTIVE PRODUCTS DURING THE WARRANTY PERIOD IS THE WHOLE AND EXCLUSIVE REMEDY PROVIDED TO THE CUSTOMER. BLACKMAGIC DESIGN WILL NOT BE LIABLE FOR ANY INDIRECT, SPECIAL, INCIDENTAL OR CONSEQUENTIAL DAMAGES IRRESPECTIVE OF WHETHER BLACKMAGIC DESIGN OR THE VENDOR HAS ADVANCE NOTICE OF THE POSSIBILITY OF SUCH DAMAGES. BLACKMAGIC DESIGN IS NOT LIABLE FOR ANY ILLEGAL USE OF EQUIPMENT BY CUSTOMER. BLACKMAGIC IS NOT LIABLE FOR ANY DAMAGES RESULTING FROM USE OF THIS PRODUCT. USER OPERATES THIS PRODUCT AT OWN RISK.